Tribune zetels.be

daplast

SEATING IS OUR GAME



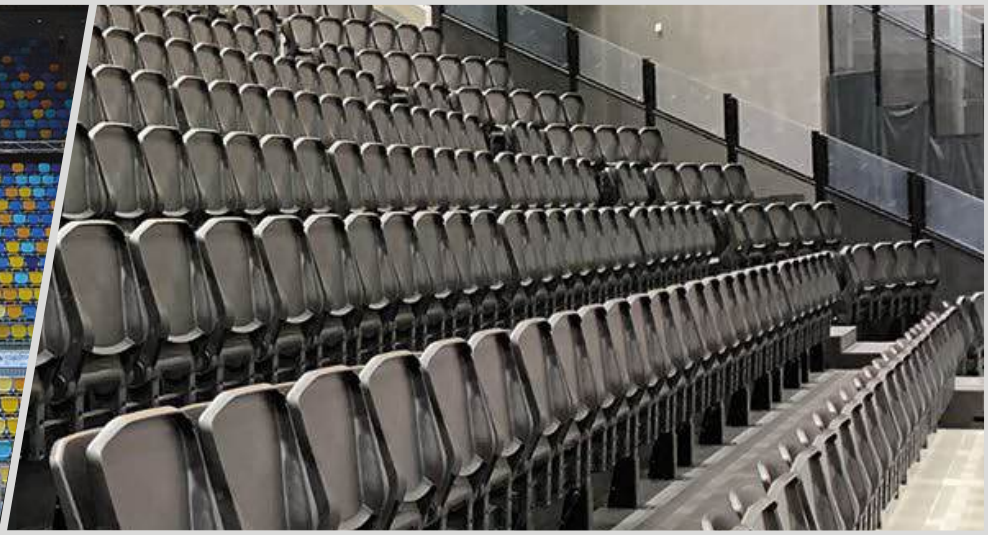

avatar™





Daplast S.L | Ctra. Palma del río Km9 | 14005 Córdoba Spain | +34 957 329 448 | daplast@daplast.com

W&H SPORTS

daplast
SEATING IS OUR GAME

# Avatar
## Folding Seats







GENERAL DESCRIPTION

Folding seat with high backrest, recommended for first class sports facilities or VIP areas. The rail fixing system is adaptable to any geometry or need, and can be installed on individual brackets or on benches up to 4 seats. It can be fixed to the floor or to the riser of the row, offering in each case the ideal solution for the venue. Installation system allows a quick assembly and easy maintenance of the seats installed.

The rail has a 60x40mm standard metal section. This system allows obtaining a customized and flexible audience capacity, according to the event. The Avatar seat optimizes the space between rows – when folded it only occupies 200 mm of depth.

Level 4
Severe public use
according to
**UNE-EN13200**
regulation.

**Recommended in:**

Football Stadiums
Arena and Sports Pavilions
Auditoriums and Leisure Venues

ASSOCIATED COMPANY
AIDIMME
METAL-PROCESSING, FURNITURE, WOOD AND PACKAGING
TECHNOLOGY INSTITUTE

FIBA APPROVED EQUIPMENT

TECHNICAL DESCRIPTION

Seat and backrest manufactured by injection, moulded in high quality stabilized plastic (copolymer polypropylene) fixed by a structure made of polyamide with a 30% fiberglass load (PA). Spring folding system. Avatar mechanical resistance is tested according to UNE-EN 12727. Protection against UV light according to UNE-EN 13200-4 standard. Flame retardant on demand.



PREMIUM OPTION: Upholstered seat and backrest, weather-resistant fabric.

SUITE OPTION: Fully upholstered seat, recommended for first class stadiums or VIP areas. Folded it only occupies 230 mm of depth.



BRACKETS

Fixing system adaptable to any geometry of the grandstands. Riser or floor mounted benches (up to 4 seats) or individual brackets fixed by 3 anchoring points. Both, benches and brackets, are made of steel, with rail section dimensions 60×40 mm.

# BASIC

Avatar Folding Seats

reddot award 2016
winner



Seat and backrest manufactured by injection moulding.



# COMPACT

Avatar Folding Seats



Seat and backrest manufactured by injection moulding. Compact version of AVATAR basic seat, with measures designed to install it on a very narrow tread bleachers or for sports venues that need to optimize its audience capacity.

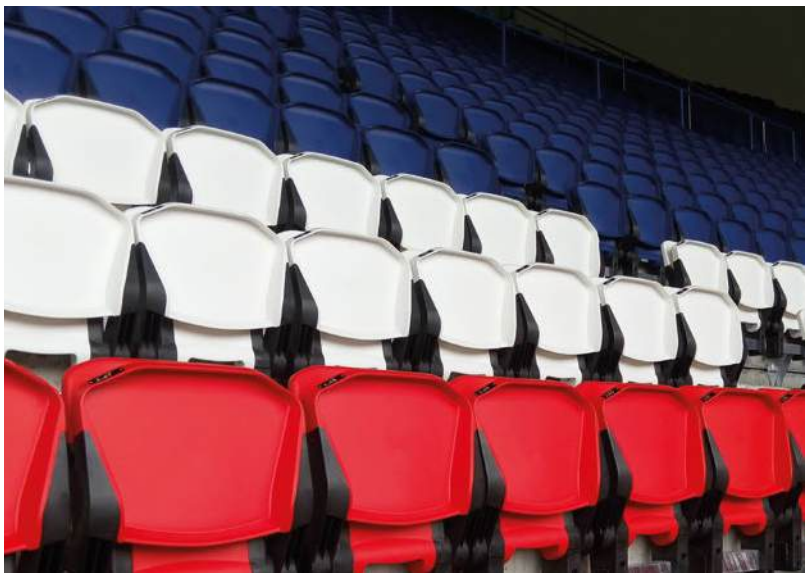

daplast
SEATING IS OUR GAME

# PREMIUM

Avatar Folding Seats



Seat and backrest manufactured by injection moulding, upholstered seat and backrest.



# SUITE

Avatar Folding Seats



Fully upholstered seat, covered with injected polyurethane foam, upholstered with weather-resistant fabric.

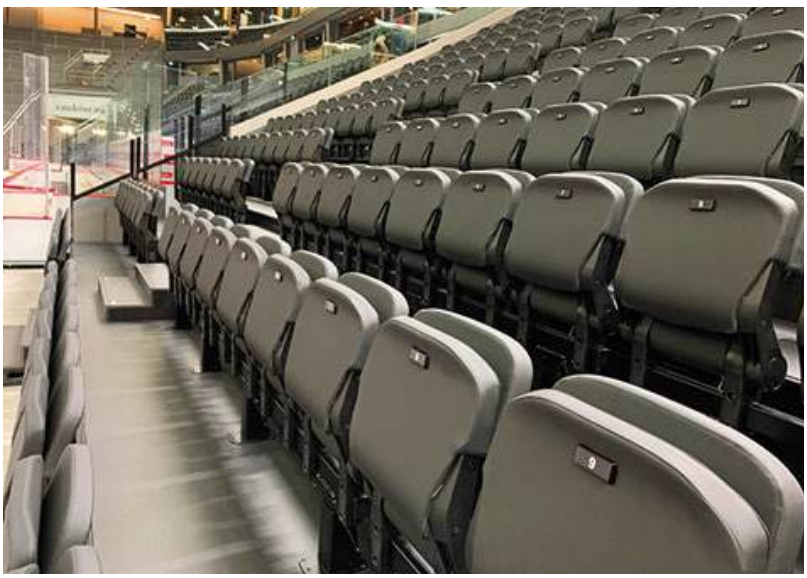

## METAL COATING

Tested by salt spray test applied during 500 hours without metal base corrosion.



Hot dip galvanized by immersion. Galvanized coating thickness of 55-70 µm according to UNE-EN 1179 and UNE-EN ISO 1461 (Table 2).



Cataphoresis and epoxy-polyester powder paint. Coating thickness of 60-80 µm. RAL 9005.

## COLOURS AND FINISHING

### SEAT AND BACKREST

We develop any RAL colour technically available according to each project.



### SIDE STRUCTURE

1150
RAL 9005

Manufactured by injection in polyamide reinforced with fiberglass of great resistance. Black colour.



## ACCESSORIES




### NUMBERING PLATES

Available row and seat numbering in aluminium or vandal resistant vinyl. Fixed with rivets or adhesive. Seat numbering plate dimensions 40x20 mm.






### ARMREST FIXED TO BACKREST

Manufactured in polyamide reinforced with fiberglass up to 30%. Mechanical resistance according to UNE-EN 12727.




### AVATAR SUITE NUMBERING PLATES

Aluminium vandal-resistant adhesive plate. 60x20x0,60 mm.

### FOLDING ARMREST



Recommended in telescopic stands. Dimensions: 400x266x45 mm. Armrest structure made in polyamide reinforced with fiberglass up to 30%, with a top part made of copolymer polypropylene. The armrest is fixed to the rail. It complies with mechanical resistance according to the UNE-EN 12727.

### FIXED ARMREST



Fixed to the rail.
Dimensions:
360x250x60 mm.
Manufactured in polyamide reinforced with fiberglass up to 30%. Mechanical resistance according to UNE-EN 12727.

### CUPHOLDER



Fixed to the rail.
Dimensions:
100x163x96 mm.
Ø75 mm of diameter.
Manufactured in polypropylene.

Fixed to the armrest. Dimensions:
100x110x90 mm. Ø75 mm of diameter.
Manufactured in polypropylene.

## EXTRA ACCESSORIES AND FINISHINGS FOR PREMIUM AND SUITE VERSIONS

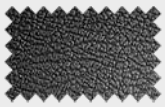

### UPHOLSTERY

Wide range of colours available for outdoor and indoor. According to project.

### FIXED ARMREST UPHOLSTERED

Side upholstery according to project, for indoor or outdoor.



daplast
SEATING IS OUR GAME

**BASIC & PREMIUM**
Avatar Folding Seats

## SEATS AND ACCESSORIES DIMENSIONS

| Dimensions ( mm )<br>Dimensional variation ( +/- 5 mm ) | Seat | Shared armrest | | | | | Double Armrest | | | | |
|---|---|---|---|---|---|---|---|---|---|---|---|
| | | Fixed to the backrest | Fixed to the backrest with cupholder | Fixed to the rail | Fixed to the rail with cupholder | Folding armrest | Fixed to the backrest | Fixed to the backrest with cupholder | Fixed to the rail | Fixed to the rail with cupholder | Folding armrest |
| Minimun distance between axes (A) | 445 | 500 | 550 | 500 | 560 | 505 | 550 | 550 | 555 | 585 | 555 |
| Recommended distance between axes [B] | 450 | 500 | 550 | 500 | 560 | 510 | 550 | 550 | 560 | 615 | 560 |
| Minimum seat width [C] | 445 | | | | | | | | | | |
| Depth (closed seat) ( E1,E2,E3 y E4) | E1 (200) | E2 (300) | E2 (300) | E2 (300) | E4 (352) | E3 (330) | E2 (300) | E2 (300) | E2 (300) | E4 (352) | E3 (330) |
| Depth (open seat) (F) | 540 | | | | | | | | | | |
| Depth (closed seat and armrest up) [E1] | 200 | | | | | | | | | | 200 |
| Seat height ( I ) | 630 | | | | | | | | | | |
| Backrest height (D) | 480 | | | | | | | | | | |
| Open seat-base height [J] | 450 | | | | | | | | | | |
| Armrests height (K) | | (1) 658 | | (2) 637 | | | (1) 658 | | (2) 637 | | |
| Overall height (L) | 850 | | | | | | | | | | |

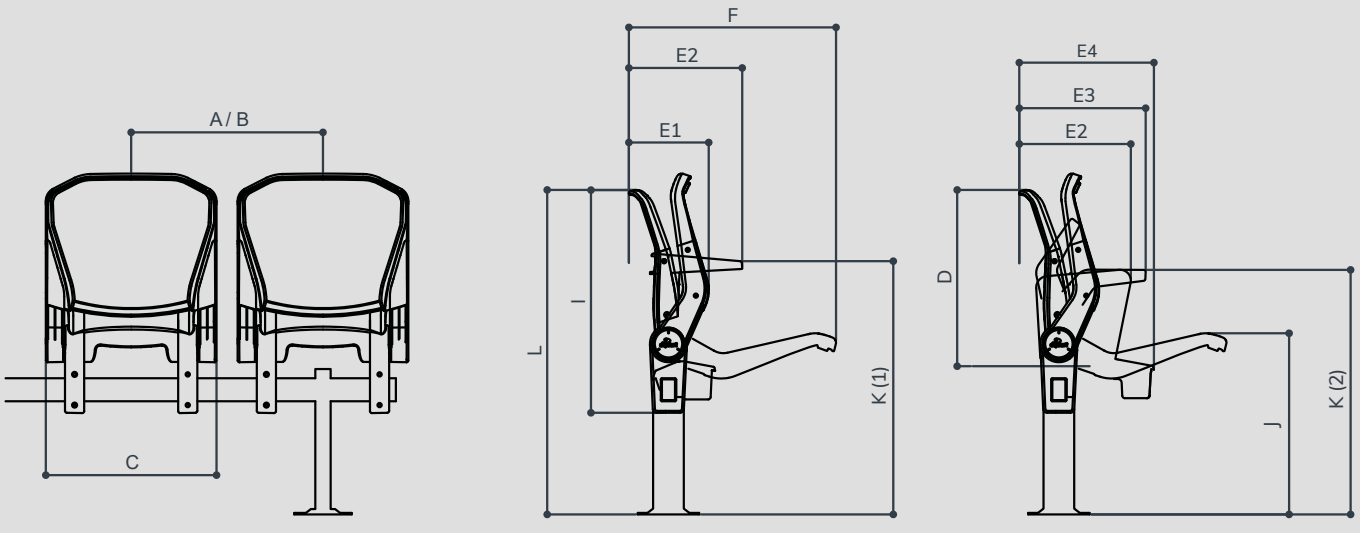

daplast
SEATING IS OUR GAME

# COMPACT
Avatar Folding Seats

## SEATS AND ACCESSORIES DIMENSIONS

| Dimensions ( mm )<br>Dimensional variation ( +/- 5 mm ) | Seat | Shared armrest | | | | | Double Armrest | | | | |
|---|---|---|---|---|---|---|---|---|---|---|---|
| | | Fixed to the backrest | Fixed to the backrest with cupholder | Fixed to the rail | Fixed to the rail with cupholder | Folding armrest | Fixed to the backrest | Fixed to the backrest with cupholder | Fixed to the rail | Fixed to the rail with cupholder | Folding armrest |
| Minimun distance between axes (A) | 420 | 480 | 550 | 480 | 540 | 480 | 530 | 530 | 535 | 560 | 530 |
| Recommended distance between axes [B] | 450 | 500 | 550 | 500 | 550 | 500 | 550 | 550 | 550 | 600 | 550 |
| Minimum seat width [C] | 420 | | | | | | 520 | | | | |
| Depth (closed seat) ( E1,E2,E3 y E4) | E1 (200) | E2 (300) | E2 (300) | E2 (300) | E4 (352) | E3 (330) | E2 (300) | E2 (300) | E2 (300) | E4 (352) | E3 (330) |
| Depth (open seat) (F) | 480 | | | | | | | | | | |
| Depth (closed seat and armrest up) [E1] | 200 | | | | | | | | | | 200 |
| Seat height ( I ) | 580 | | | | | | | | | | |
| Backrest height (D) | 480 | | | | | | | | | | |
| Open seat-base height [J] | 450 | | | | | | | | | | |
| Armrests height (K) | | (1) 658 | | (2) 637 | | | (1) 658 | | (2) 637 | | |
| Overall height (L) | 850 | | | | | | | | | | |

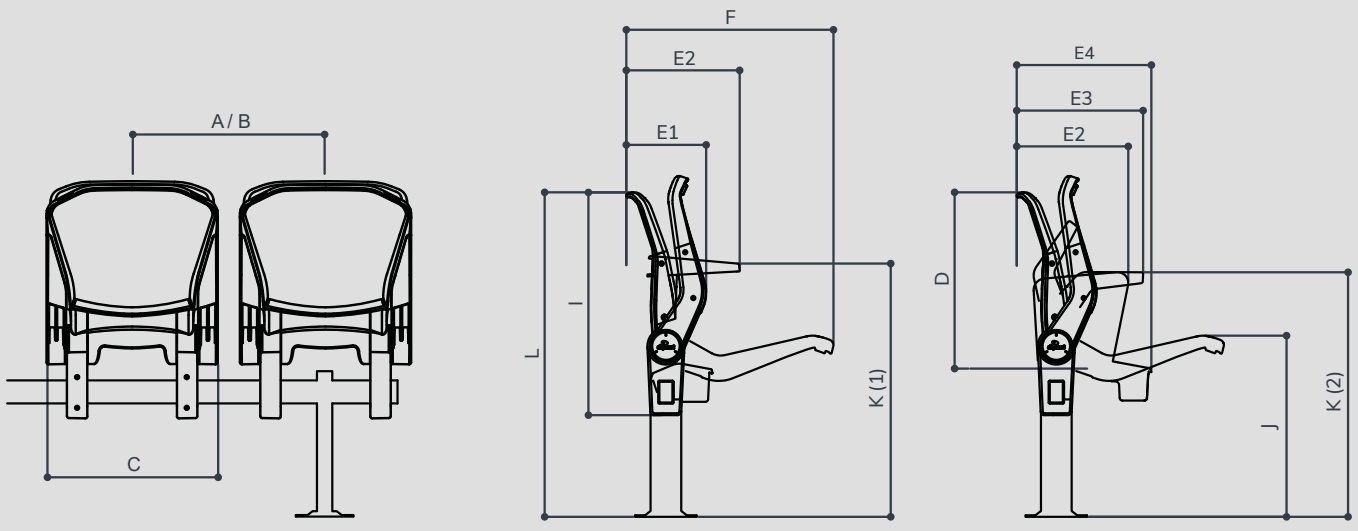

daplast
SEATING IS OUR GAME

# SUITE
Avatar Folding Seats

## SEATS AND ACCESSORIES DIMENSIONS

| Dimensions ( mm )<br>Dimensional variation ( +/- 5 mm ) | Seat | Shared armrest | | | | | Double Armrest | | | | |
|---|---|---|---|---|---|---|---|---|---|---|---|
| | | Fixed to the backrest | Fixed to the backrest with cupholder | Fixed to the rail | Fixed to the rail with cupholder | Folding armrest | Fixed to the backrest | Fixed to the backrest with cupholder | Fixed to the rail | Fixed to the rail with cupholder | Folding armrest |
| Minimun distance between axes (A) | 445 | 500 | 550 | 500 | 560 | 505 | 550 | 550 | 555 | 585 | 555 |
| Recommended distance between axes [B] | 450 | 500 | 550 | 500 | 560 | 510 | 550 | 550 | 560 | 615 | 560 |
| Minimum seat width [C] | 445 | | | | | | | | | | |
| Depth (closed seat) ( E1,E2,E3 y E4) | E1 (230) | E2 (300) | E2 (300) | E2 (300) | E4 (352) | E3 (330) | E2 (300) | E2 (300) | E2 (300) | E4 (352) | E3 (330) |
| Depth (open seat) (F) | 560 | | | | | | | | | | |
| Depth (closed seat and armrest up) [E1] | 230 | | | | | | | | | | 230 |
| Seat height ( I ) | 645 | | | | | | | | | | |
| Backrest height (D) | 530 | | | | | | | | | | |
| Open seat-base height [J] | 450 | | | | | | | | | | |
| Armrests height (K) | | (1) 658 | | (2) 637 | | | (1) 658 | | (2) 637 | | |
| Overall height (L) | 880 | | | | | | | | | | |

